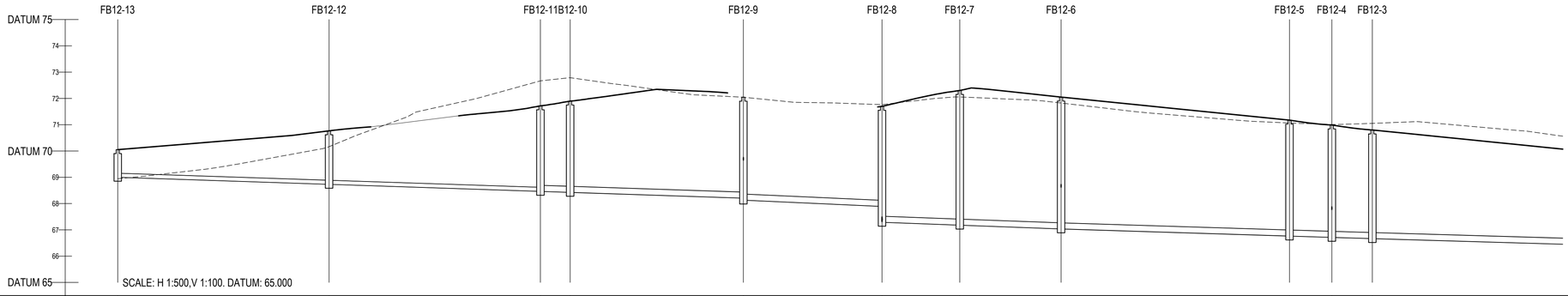

COVER LEVEL	70.052		70.767		71.719	71.899		72.046		71.698		72.301		72.051		71.173		70.990	70.800					
INVERT LEVEL	69.002	4.000	68.734 68.734	4.000 (3)	68.466 68.466	68.429 68.428	4.002	68.208 68.133	4.003	67.893 67.290	4.004	67.180 67.160	4.005	67.037 67.037	4.006	65.765 65.765	4.007	66.716 66.716	4.008 66.669	66.669	4.009	66.383		
DEPTH (m)	1.050		2.033		3.253	3.471		3.913		4.408		5.121		5.013		4.408		4.274	4.131					
DISTANCE (m)	40.22		40.22		5.65	32.97		26.38		14.80		19.28		43.47		8.06		7.70	52.07					
PIPE SLOPE	1:150		1:150		1:150	1:150		1:110		1:135		1:135		1:160		1:161		1:165	1:170					
PIPE SIZE	150mm		150mm		225mm	225mm		225mm		225mm		225mm		225mm		225mm		225mm	225mm					
PIPE TYPE	uPVC SN8		uPVC SN8		uPVC SN8	uPVC SN8		uPVC SN8		uPVC SN8		uPVC SN8		uPVC SN8		uPVC SN8		uPVC SN8	uPVC SN8					

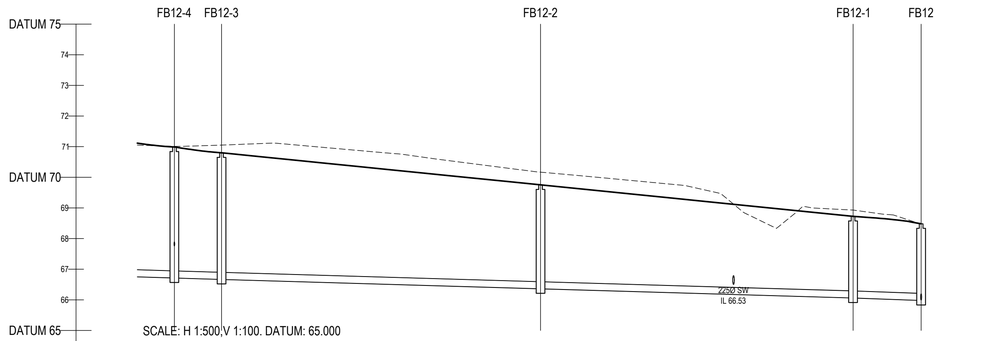

COVER LEVEL		70.990	70.800		69.754		68.725	68.483
INVERT LEVEL	66.765 66.765	4.007 66.716 66.716	4.008 66.669 66.669	4.009	66.383 66.383	4.010	66.083 66.083	4.011 65.982
DEPTH (m)		4.274	4.131		3.391		2.662	2.501
DISTANCE (m)	8.06	7.70	52.07		51.02		11.11	
PIPE SLOPE	1:161	1:165	1:170		1:170		1:137	
PIPE SIZE	225mm	225mm	225mm		225mm		225mm	
PIPE TYPE	uPVC SN8	uPVC SN8	uPVC SN8		uPVC SN8		uPVC SN8	

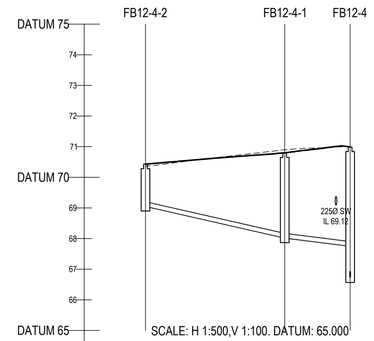

COVER LEVEL		70.430	70.798	70.990
INVERT LEVEL		69.050 8.000	68.017 68.017 8.001	67.750
DEPTH (m)		1.380	2.781	4.274
DISTANCE (m)		22.73	10.68	
PIPE SLOPE		1:22	1:40	
PIPE SIZE		150mm	150mm	
PIPE TYPE		uPVC SN8	uPVC SN8	

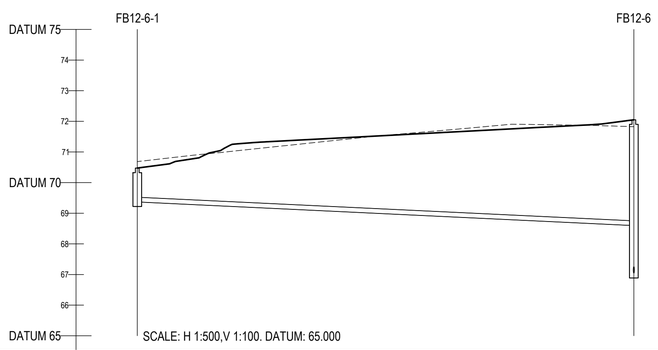

COVER LEVEL		70.474	72.051
INVERT LEVEL		69.370 7.000	68.599
DEPTH (m)		1.104	5.013
DISTANCE (m)		81.07	
PIPE SLOPE		1:105	
PIPE SIZE		150mm	
PIPE TYPE		uPVC SN8	

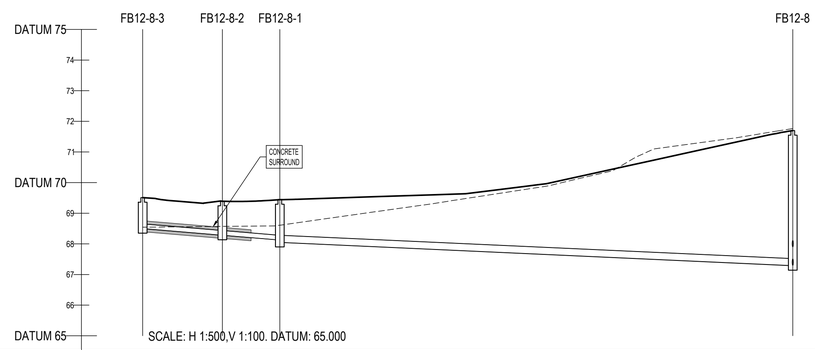

COVER LEVEL		69.510	69.392	69.444	71.698
INVERT LEVEL		68.500 6.000	68.283 68.283 6.001	68.127 68.052 6.002	67.290
DEPTH (m)		1.010	1.109	1.393	4.408
DISTANCE (m)		13.00	9.38	83.73	
PIPE SLOPE		1:60	1:60	1:110	
PIPE SIZE		150mm	150mm	225mm	
PIPE TYPE		uPVC SN8	uPVC SN8	uPVC SN8	

ON ORIGINAL

0 5 10 15 20 25 30 40 50mm

© COPYRIGHT OF THIS DRAWING IS RESERVED BY DBFL CONSULTING ENGINEERS. NO PART SHALL BE REPRODUCED OR TRANSMITTED WITHOUT THEIR WRITTEN PERMISSION.

NO CHANGES OF WHATSOEVER NATURE ARE TO BE MADE TO ANY DETAILS SET OUT OR CONTAINED IN ANY DBFL SPECIFICATIONS OR DRAWINGS UNLESS THE EXPRESS CONSENT HAS BEEN OBTAINED IN ADVANCE, IN WRITING, FROM DBFL.

NOTES:

1. ALL DRAWINGS TO BE CHECKED BY CONTRACTOR ON SITE AND ENGINEER INFORMED OF DISCREPANCIES BEFORE WORK COMMENCES
2. ALL LEVELS ARE IN METRES AND ARE RELATED TO ORDNANCE DATUM
3. CONTRACTOR SHALL SATISFY HIMSELF AS TO THE ACCURACY OF PAVEMENT LEVELS ON SITE PRIOR TO COMMENCEMENT OF WORKS ON SITE
4. ALL WORKS TO BE CONSTRUCTED IN ACCORDANCE WITH THE NRA SPECIFICATION FOR ROAD WORKS UNLESS NOTED OTHERWISE
5. THIS DRAWING IS FOR PLANNING PURPOSES ONLY
6. MANHOLE COVER LEVELS ARE TO CONFORM WITH FINISHED ROAD AND PATH LEVELS
7. WHERE COVER TO PIPE IS LESS THAN 1200mm (ROAD/PATH/VERGE) OR 900mm (OPEN SPACE) SURROUND PIPE IN MINIMUM 150mm CONCRETE

KEY

EXISTING GROUND PROFILE
PROPOSED GROUND PROFILE

rev	date	description	by	chkd.
P01	01-09-22	STAGE 3 SHD PLANNING	GMC	BCM

client approval
- A - Approved
- B - Approved with comments
- C - Do not use

suitability: S2 - INFORMATION
issue purpose: PLANNING

DBFL Consulting Engineers
Civil, Structural & Transportation Engineering
www.dbfl.ie

DUBLIN OFFICE: Ormond House, Upper Ormond Quay, Dublin 7, D07 W704
PHONE +353 1 400 4000

CORK OFFICE: Phoenix House, Monahan Road, Cork, T12 H1XY
PHONE +353 (0) 21 2024538

WATERFORD OFFICE: Suite 8b The Atrium, Maritana Gate, Canada Street, Waterford, X91 W028
PHONE +353 51 309 500

project ref.
ASHBOURNE SHD

drawing title
LONGITUDINAL SECTIONS THROUGH FOUL SEWER SHEET 6

client
ARNUB LTD. & ASPECT HOMES (ADC) LTD

designed by	author	scale	sheet size
BCM	GMC	H 1:500, V 1:100	A1

drawing no.: 200059-DBFL-FW-SP-DR-C-3306
revision: P01